www.hy-lok.com

Catalog No. H-100NV
Apr. 2023

Integral Bonnet Needle Valves

NV & SV Series

- Pressure up to 6000psig (413bar)
- Temperature up to 600°F (316°C)
- Sizes from 1/8" to 3/4" (3mm-18mm)
- Positive leak tight shut-off
- Metal to metal and soft seat tip
- Straight & Angle pattern body

HY-LOK CORPORATION

© 2017 - 2023 HY-LOK CORPORATION All rights reserved

Features

Packing Nut
- allows smooth packing adjustment.

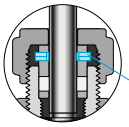

∗ Live-Loaded Packing System (Optional)

Stem Threads
- rolled threads provides improved cycle life.

Integral Bonnet
- is available with straight and angle pattern.

Variety of End Connections
- include Hy-Lok tube fittings, male/female NPT threads, male/female ISO threads.

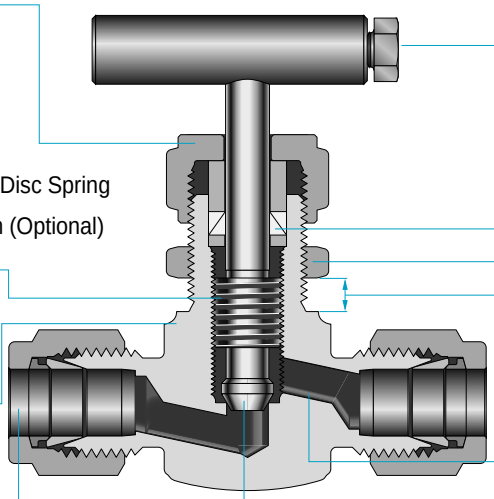

Best Suited Standard Handles
- stainless steel bar handle
- black phenolic round handle

Packing Materials
- are available in PTFE (standard) and PEEK.(option)

Panel Mounting Nut (Option)
- allows easy mounting.

Panel Mount Thickness
- 3.2 min. to 6.4 max. (1/8 min. to 1/4 max.)

Orifice sizes
- From 0.08 to 0.375 in. (2.0 to 9.5mm)

Flow coefficients (Cv)
- From 0.09 to 1.80

Variety of Stem Tips
- include vee, regulating, and soft seat with PCTFE

Vee Tip Regulating Tip Soft Seat Tip

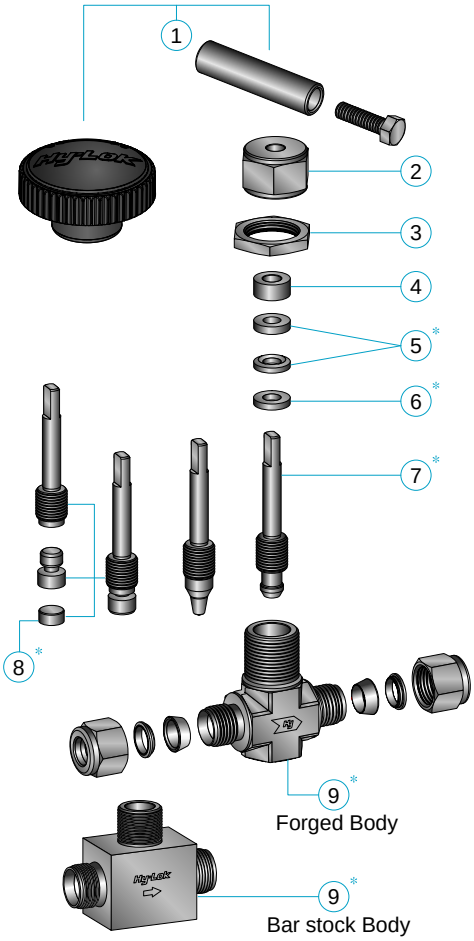

Materials of Construction

Description			Grade / ASTM Specification			
			Valve Body Materials			
			SS 316	Brass	Carbon Steel	Alloy 400
1	Handle		Stainless Steel	Black Phenolic Knob	Aluminum Bar	Stainless Steel
2	Packing Nut		SS316 / A479	C 360 / B16	1020 / A108	Alloy 400 / B164
3	Panel Nut (Option)		SS316 / A276		SS316 / A479	Stainless Steel
4	Gland					SS 316 / A479
5	Packing*		PTFE			
6	Packing Washer*		SS316 / A479			Alloy 400 / B164
7	Stem*	Vee	SS316 / A479	C 360 / B16	SS316 / A479	Alloy 400 / B164
		Regulating				
		Soft Seat				
8	Soft Seat Tip*		PCTFE			
9	Body*	NV	SS316 / A182	C 377 / B283	S20C or A105	Alloy 400 / B564
		SV	SS316 / A479	-	-	-

Note : " ∗ "marked are wetted parts.
Panel nut is optional at SV Series.
Soft Seat is only available on NV Series.

Technical Data

Pressure-Temperature Ratings

- PTFE (Standard) used up to 450°F (232°C)
- PEEK (Optional) used up to : 316 Stainless Steel 600°F (315°C) / Alloy 400 500°F (260°C)

ASME Class	2500	N/A		2500
Material Group	2.2	N/A		3.4
Materials	316 SS	Brass	Carbon Steel	Alloy 400
Temperature	Working Pressure (psig)			
-65°F (-54°C) to -20°F (-29°C)	6000 (413)	3000 (206)	-	5000 (344)
100°F (38°C)	6000 (413)	3000 (206)	6000 (413)	5000 (344)
200°F (93°C)	5160 (355)	2350 (161)	5420 (373)	4380 (301)
300°F (148°C)	4660 (321)	2050 (141)	5320 (366)	4080 (281)
350°F (176°C)	4470 (308)	1470 (101)	5230 (360)	4010 (276)
400°F (204°C)	4280 (295)	390 (26)	-	3940 (271)
450°F (232°C)	4130 (284)	-	-	3940 (271)
500°F (260°C)	3980 (274)	-	-	3940 (271)
600°F (315°C)	3760 (259)	-	-	-

- To determine kPa, multiply psig by 6.89 and bar by 0.0689
- When valves with Hy-Lok Fitting end connections are connected to tubing, the working pressure of tubing must be the considered in the calculation of total system working pressure
- Extreme temperature fluctuations may require packing adjustment

Stem

- Vee & Regulating stem can be used up to 450°F (232°C)
- Vee & Regulating stem in Brass can be used up to 400°F (204°C)
- Soft seat stem with PCTFE stem tip can be used up to 200°F (93°C)
- Carbon steel is rated at a low temperature of -20°F (-29°C)

Flow Data

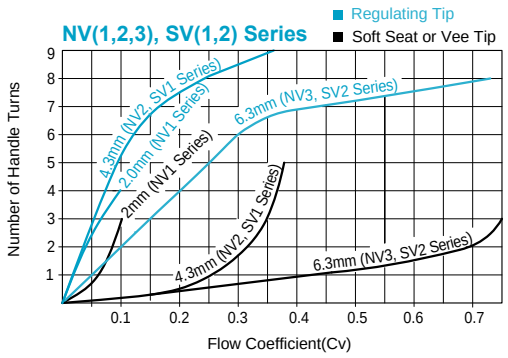

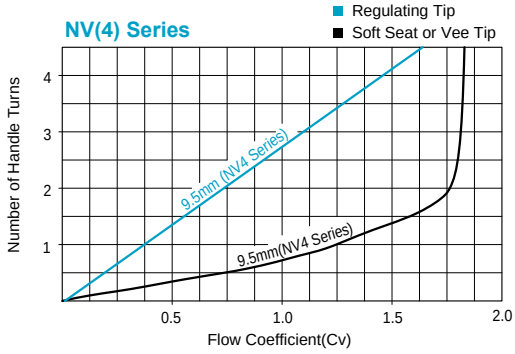

Handle

- Stainless steel bar is standard on all SS316 and alloy 400 body valves.
- Black phenolic knob is standard for brass body and soft seat stem valves.
- Black aluminum bar handles are basically carbon steel on standard. Other materials are available as an option.

Testing

- Each valve is tested with nitrogen @ 1000psig (69bar) to max leak rate of 0.1SCCM.
- Hydrostatic shell test is performed at 1.5 times the working pressure
- Optional tests are available upon request.

Sour Gas Service

- This service is provided to meet NACE Standard MR-0175 & MR-0103.

Cleaning and Packaging

- All integral bonnet needle valves are cleaned and packaged in accordance with Hy-Lok standard cleaning and packaging.
- A special cleaning and packaging are available as an option.

NV Series forged body

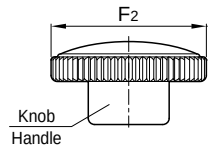

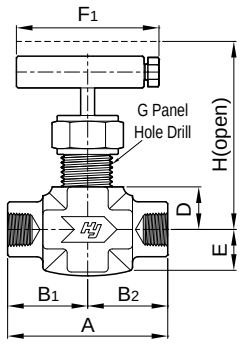

Female

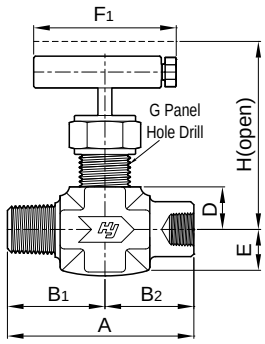

Male/Female

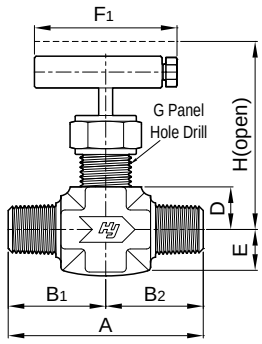

Male

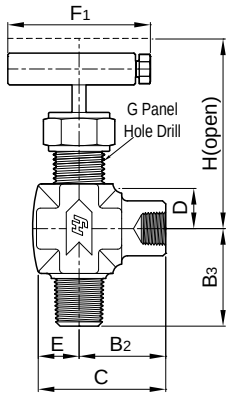

Male/Female Angle Pattern

End Connections		Orifice in. (mm)	Cv	Ordering Number	Dimensions in. (mm)										
Inlet & Outlet	Size				A	B_1	B_2	B_3	C	D	E	F_1	F_2 *	G	H
Female NPT	1/8"	0.08(2.0)	0.09	NV1F-2N	1.65 (42.0)		0.82 (21.0)		1.13 (28.9)	0.44 (11.2)	0.31 (7.9)	1.42 (36.0)	1.00 (25.4)	0.47 (11.9)	1.71 (43.4)
	1/4"	0.25(6.3)	0.73	NV3F-4N	2.12 (53.8)		1.06 (26.9)		1.61 (41.0)	0.55 (14.0)	0.53 (13.5)	2.52 (64.0)	1.89 (48.0)	0.79 (20.0)	2.50 (63.6)
	3/8"	0.25(6.3)	0.73	NV3F-6N	2.20 (56.0)		1.10 (28.0)		1.61 (41.0)	0.55 (14.0)	0.59 (15.0)	2.52 (64.0)	1.89 (48.0)	0.79 (20.0)	2.50 (63.6)
	1/2"	0.37(9.5)	1.80	NV4F-8N	2.99 (76.0)		1.50 (38.0)		2.24 (57.0)	0.73 (18.5)	0.75 (19.0)	2.99 (76.0)	2.60 (66.0)	0.89 (22.5)	3.61 (91.7)
	3/4"	0.37(9.5)	1.80	NV4F-12N	3.66 (93.0)				2.58 (65.5)						
Female ISO[1]	1/4"	0.25(6.3)	0.73	NV3F-4R	2.12 (53.8)		1.06 (26.9)		1.61 (41.0)	0.55 (14.0)	0.53 (13.5)	2.52 (64.0)	1.89 (48.0)	0.79 (20.0)	2.50 (63.6)
	3/8"	0.25(6.3)	0.73	NV3F-6R	2.20 (56.0)		1.10 (28.0)		1.61 (41.0)	0.55 (14.0)	0.59 (15.0)	2.52 (64.0)	1.89 (48.0)	0.79 (20.0)	2.50 (63.6)
	1/2"	0.37(9.5)	1.80	NV4F-8R	2.99 (76.0)		1.50 (38.0)		2.24 (57.0)	0.73 (18.5)	0.75 (19.0)	2.99 (76.0)	2.60 (66.0)	0.89 (22.5)	3.61 (91.7)
	3/4"	0.37(9.5)	1.80	NV4F-12R	3.66 (93.0)				2.58 (65.5)						
Male / Female NPT	1/4"	0.25(6.3)	0.73	NV3MF-4N	2.20 (56.0)		1.10 (28.0)		1.61 (41.0)	0.55 (114.0)	0.53 (13.5)	2.52 (64.0)	1.89 (48.0)	0.79 (20.0)	2.50 (63.6)
	1/2"	0.37(9.5)	1.80	NV4MF-8N	2.99 (76.0)		1.50 (38.0)		2.24 (57.0)	0.73 (18.5)	0.75 (19.0)	2.99 (76.0)	2.60 (66.0)	0.89 (22.5)	3.61 (91.7)
Male NPT	1/8"	0.08(2.0)	0.09	NV1M-2N	1.50 (38.2)		0.75 (19.1)		1.06 (26.9)	0.44 (11.2)	0.31 (7.9)	1.42 (36.0)	1.00 (25.4)	0.47 (11.9)	1.71 (43.4)
	1/4"	0.17(4.3)	0.37	NV2M-4N	1.97 (50.0)		0.98 (25.0)		1.33 (33.7)	0.43 (11.0)	0.34 (8.7)	1.77 (45.0)	1.50 (38.0)	0.53 (13.5)	2.02 (51.2)
	3/8"	0.25(6.3)	0.73	NV3M-6N	2.28 (58.0)		1.14 (29.0)		1.65 (42.0)	0.55 (14.0)	0.53 (13.5)	2.52 (64.0)	1.89 (48.0)	0.79 (20.0)	2.50 (63.6)
	1/2"	0.37(9.5)	1.80	NV4M-8N	2.99 (76.0)		1.50 (38.0)		2.24 (57.0)	0.73 (18.5)	0.75 (19.0)	2.99 (76.0)	2.60 (66.0)	0.89 (22.5)	3.61 (91.7)

[1] Ref. Specifications ISO 7/1, BS EN 10226-1, DIN-2999, JIS B0203
Dimensions in inches (millimeters) are for reference only, subject to change
* Dimension of F2 refers to the drawing on page 5.

NV Series forged body

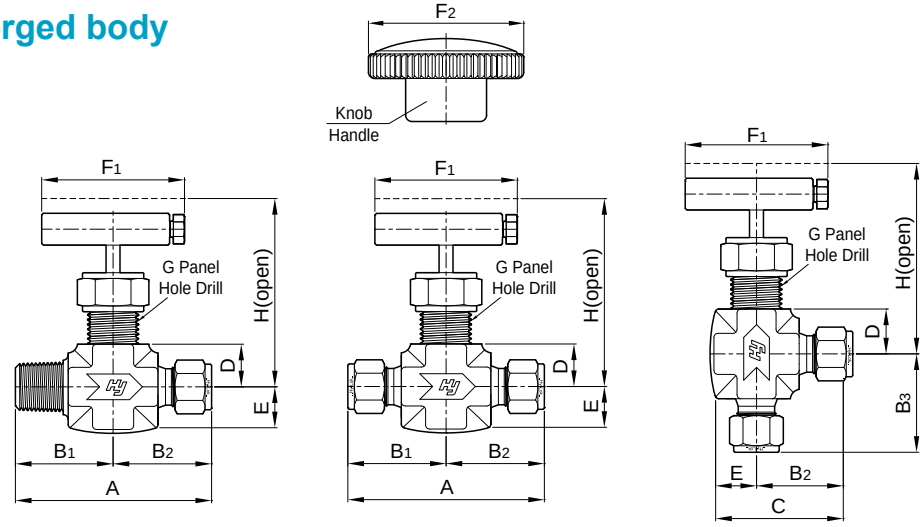

Male Hy-Lok tube fitting

Hy-Lok tube fitting

Hy-Lok tube fitting Angle Pattern

End Connections		Orifice in. (mm)	Cv	Ordering Number	Dimensions in. (mm)										
Inlet & Outlet	Size				A	B1	B2	B3	C	D	E	F1	F2	G	H
Male NPT Hy-Lok tube fittings	1/8"	0.08 (2.0)	0.09	NV1MH-2N2T	1.72 (43.7)	0.75 (19.1)	0.96 (24.6)	0.75 (19.1)	1.29 (32.8)	0.44 (11.2)	0.31 (7.9)	1.42 (36.0)	1.00 (25.4)	0.47 (11.9)	1.71 (43.4)
	1/4"	0.17 (4.3)	0.37	NV2MH-4N4T	2.12 (53.8)	0.98 (25.0)	1.13 (28.8)	0.98 (25.0)	1.65 (41.8)	0.43 (11.0)	0.51 (13.0)	1.77 (45.0)	1.50 (38.0)	0.53 (13.5)	2.02 (51.2)
	1/4" Male NPT 6.0mm Hy-Lok	0.17 (4.3)	0.37	NV2MH-4N6M				0.98 (25.0)	1.35 (34.4)						
	1/4" Male NPT 3/8" Hy-Lok	0.25 (6.3)	0.73	NV3MH-4N6T	2.41 (61.2)	1.10 (28.0)	1.31 (33.2)	1.10 (28.0)	1.82 (46.2)	0.53 (13.5)	0.51 (13.0)	2.52 (64.0)	1.89 (48.0)	0.79 (20.0)	2.50 (63.6)
	3/8"	0.25 (6.3)	0.73	NV3MH-6N6T	2.45 (62.2)	1.14 (29.0)		1.14 (29.0)							
Fractional Hy-Lok tube fittings	1/8"	0.08 (2.0)	0.09	NV1H-2T	1.93 (49.2)	0.96 (24.6)			1.27 (32.5)	0.44 (11.2)	0.31 (7.9)	1.42 (36.0)	1.00 (25.4)	0.47 (11.9)	1.71 (43.4)
	1/4"	0.17 (4.3)	0.37	NV2H-4T	2.27 (57.6)	1.13 (28.8)			1.65 (41.8)	0.43 (11.0)	0.51 (13.0)	1.77 (45.0)	1.50 (38.0)	0.53 (13.5)	2.02 (51.2)
	3/8"	0.25 (6.3)	0.73	NV3H-6T	2.61 (66.4)	1.31 (33.2)			1.82 (46.2)	0.53 (13.5)	0.51 (13.0)	2.52 (64.0)	1.89 (48.0)	0.79 (20.0)	2.50 (63.6)
	1/2"	0.25 (6.3)	0.73	NV3H-8T	2.83 (72.0)	1.42 (36.0)			1.93 (49.0)						
	1/2"	0.37 (9.5)	1.80	NV4H-8T	3.81 (97.0)	1.91 (48.5)			2.66 (67.5)	0.75 (19.0)	0.75 (19.0)	2.99 (76.0)	2.60 (66.0)	0.89 (22.5)	3.61 (91.7)
	3/4"	0.37 (9.5)	1.80	NV4H-12T											
	1"	0.37 (9.5)	1.80	NV4H-16T	4.00 (101.6)	2.00 (50.8)			-	0.85 (21.5)	0.79 (20.0)	2.99 (76.0)	2.60 (66.0)	0.89 (22.5)	3.81 (96.9)
Metric Hy-Lok tube fittings	3mm	0.08 (2.0)	0.09	NV1H-3M	1.93 (49.2)	0.96 (24.6)			1.27 (32.5)	0.44 (11.2)	0.31 (7.9)	1.42 (36.0)	1.00 (25.4)	0.47 (11.9)	1.71 (43.4)
	6mm	0.17 (4.3)	0.37	NV2H-6M	2.27 (57.6)	1.13 (28.8)			1.53 (38.8)	0.43 (11.0)	0.39 (10.0)	1.77 (45.0)	1.50 (38.0)	0.53 (13.5)	2.02 (51.2)
	8mm	0.17 (4.3)	0.37	NV2H-8M	2.33 (59.2)	1.17 (29.6)			1.56 (39.6)						
	10mm	0.25 (6.3)	0.73	NV3H-10M	2.61 (66.4)	1.31 (33.2)			1.82 (46.2)	0.53 (13.5)	0.51 (13.0)	2.52 (64.0)	1.89 (48.0)	0.79 (20.0)	2.50 (63.6)
	12mm	0.25 (6.3)	0.73	NV3H-12M	2.83 (72.0)	1.42 (36.0)			1.93 (49.0)						
	16mm	0.37 (9.5)	1.80	NV4H-16M	3.04 (77.2)	1.52 (38.6)			2.27 (57.6)	0.75 (19.0)	0.75 (19.0)	2.99 (76.0)	2.60 (66.0)	0.89 (22.5)	3.61 (91.7)
	18mm	0.37 (9.5)	1.80	NV4H-18M											

Dimensions in inches (millimeters) are for reference only, subject to change
Dimensions shown with Hy-Lok Nuts in finger-tight position, where applicable

SV Series bar stock body

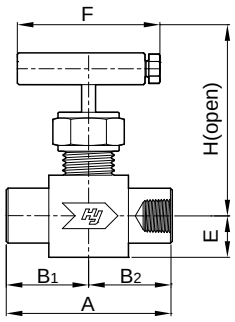

Female

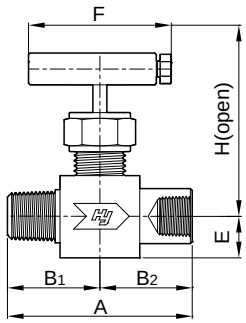

Male / Female

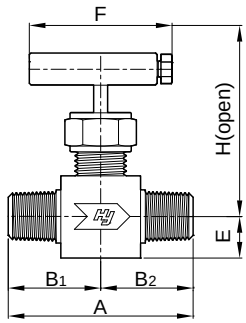

Male

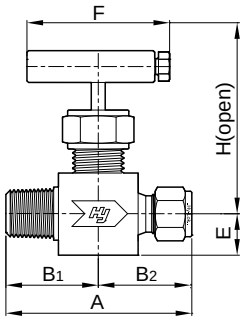

Male
Hy-Lok tube fitting

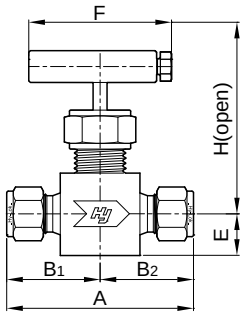

Hy-Lok tube fitting

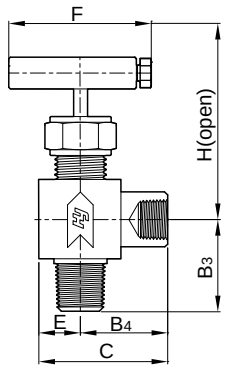

Male / Female
Angle Pattern

End Connections		Orifice in. (mm)	Cv	Ordering Number	Dimensions in. (mm)								
Inlet & Outlet	Size				A	B_1	B_2	B_3	B_4	C	E	F	H
Female NPT	1/4"	0.13 (3.2)	0.37	SV1F-4N	1.87 (47.6)	0.94 (23.8)	0.94 (23.8)	1.00 (25.4)	1.00 (25.4)	1.44 (36.5)	0.44 (11.2)	1.77 (45.0)	1.71 (43.5)
	3/8"	0.25 (6.3)	0.73	SV2F-6N	2.50 (63.6)	1.25 (31.8)	1.25 (31.8)	1.25 (31.8)	1.25 (31.8)	1.91 (48.6)	0.66 (16.8)	2.52 (64.0)	2.48 (63.0)
	1/2"	0.25 (6.3)	0.73	SV2F-8N									
Male / Female NPT	1/4"	0.13 (3.2)	0.37	SV1MF-4N	1.91 (48.4)	0.97 (24.6)	0.94 (23.8)	1.03 (26.2)	1.00 (25.4)	1.44 (36.5)	0.44 (11.2)	1.77 (45.0)	1.71 (43.5)
	3/8"	0.25 (6.3)	0.73	SV2MF-6N	2.50 (63.6)	1.25 (31.8)	1.25 (31.8)	1.22 (31.0)	1.25 (31.8)	1.91 (48.6)	0.66 (16.8)	2.52 (64.0)	2.48 (63.0)
	1/2"	0.25 (6.3)	0.73	SV2MF-8N				1.41 (35.8)					
Male NPT	1/4"	0.13 (3.2)	0.37	SV1M-4N	1.87 (49.2)	0.97 (24.6)	0.97 (24.6)	0.99 (25.2)	0.97 (24.6)	1.41 (35.8)	0.44 (11.2)	1.77 (45.0)	1.71 (43.5)
Male NPT/ Hy-Lok tube fittings	1/4" Male NPT 1/4" Hy-Lok	0.13 (3.2)	0.37	SV1MH-4N4T	2.20 (55.8)	0.97 (24.6)	1.23 (31.2)	0.99 (25.2)	1.13 (28.7)	1.57 (39.8)	0.44 (11.2)	1.77 (45.0)	1.71 (43.5)
Hy-LoK tube fittings	1/4"	0.13 (3.2)	0.37	SV1H-4T	2.46 (62.4)	1.23 (31.2)	1.23 (31.2)	1.17 (29.7)	1.13 (28.7)	1.57 (39.8)	0.44 (11.2)	1.77 (45.0)	1.71 (43.5)
	3/8"	0.25 (6.3)	0.73	SV2H-6T	3.08 (78.2)	1.54 (39.1)	1.54 (39.1)	1.25 (31.8)	1.25 (31.8)	1.91 (48.6)	0.66 (16.8)	2.52 (64.0)	2.48 (63.0)
	1/2"	0.25 (6.3)	0.73	SV2H-8T	3.30 (83.8)	1.65 (41.9)	1.65 (41.9)	-	-	-			

Dimensions in inches (millimeters) are for reference only, subject to change
Dimensions shown with Hy-Lok Nuts in finger-tight position, where applicable

Ordering Information

NV3 F A† 6N S† PK† K† FE† P† SOG† S316

Series Designator
- NV* : NV Series
- SV* : SV Series

Body Pattern Designator
- Nil : Straight Pattern (Standard)
- A : Angle Pattern

Stem Packing Designator
- Nil : PTFE (Standard)
- PK : PEEK

- Nil : without (Standard)
- FE : Live Loaded System

Sour Gas Service
- Nil : without (Standard)
- SOG : NACE MR-01-75

Size Designator

End Connector Designator
- F : Both Ends Female Pipe Thread
- M : Both Ends Male Pipe Thread
- H : Both Ends Hy-Lok Tube Fitting
- MF : Male Pipe Thread and Female Pipe Thread
- MH : Male Pipe Thread and Hy-Lok Tube Fitting

Stem Tip Designator
- Nil : Vee (Standard)
- R : Regulating
- S : Soft Seat with PCTFE

Material Designator
- S316 : 316 Stainless Steel
- BRAS : Brass
- STEL : Carbon Steel
- MONE : Alloy 400 (Monel)

Panel Mounting Nut Designator
Standard
- NV Series : With Panel Mounting Nut
- SV Series : Without Panel Mounting Nut

- Nil : Standard (refer to above)
- P : Panel Mounting Nut (SV Series Only)

Pipe Thread Designation NPT (ISO / BSP)

Nom. Size	1/8"	1/4"	3/8"	1/2"	3/4"
Designator	2N(R)	4N(R)	6N(R)	8N(R)	12N(R)

Handle Designator
- Nil : Stainless Steel Bar (Standard)
- K : Black Phenolic Knob
  Available only with Soft Seat Tip

Tube O.D. Designation

Inch Tube	Tube O.D.	1/8"	1/4"	3/8"	1/2"	3/4"
	Designation	2T	4T	6T	8T	12T
Metric Tube	Tube O.D.	3mm	6mm	10mm	12mm	18mm
	Designation	3M	6M	10M	12M	18M

Note † : No designator is required for standard
e.g. NV3F-6N-S316

Use of Non-Standard Products

For non-standard not shown in dimension table, it can be used by assembling Hy-Lok tube fittings to standard products.
This use of way is easily available to the construction of system, especially it is more reasonable in aspects of delivery and purchasing costs. For the more information and types of connector, please refer to the Hy-Lok Tube Fitting Catalog.

Example of Connection

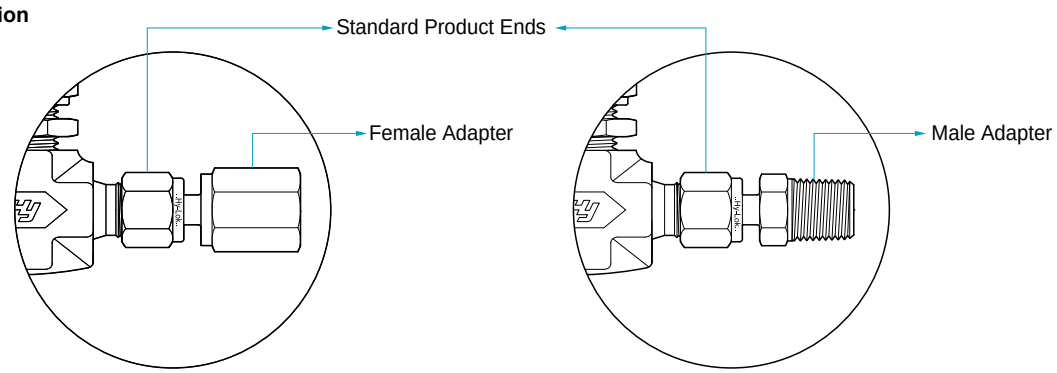

Note : This figure is only for reference, please refer to Hy-Lok tube fittings catalog for varios connection.

SAFETY in VALVE SELECTION

Proper installation, materials compatibility, operation and maintenance of these valves are the responsibility of the user. The total system design must be taken into consideration to ensure optimal performance and safety

Hy-Lok Coporation
97, Noksansandan 27-ro, Gangseo-gu,
Busan, South Korea
Phone 82 51 9700 800
Fax 82 51 831 7920
Visit www.hy-lok.com or
contact your authorized Hy-Lok representative.