www.hy-lok.com

Catalog No. H-RP100
Feb. 2023

Rising Plug Valves

RP Series

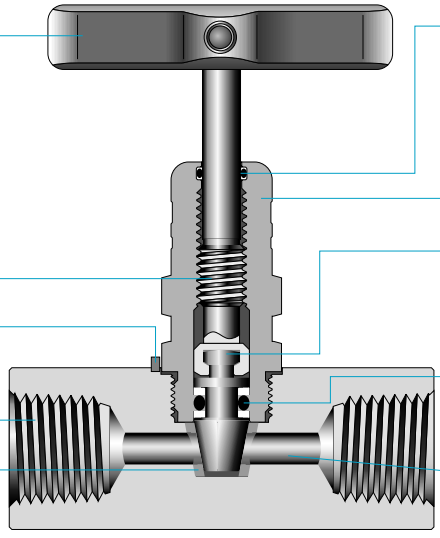

Robust Bar Handle
- sintered stainless steel handle.

Stem Thread
- is to prevent particle build-up and for long life.
- is above the packing to prevent fluid contamination.

Locking Pin
- ensures no disassembly.

Variety of End Connections
- include male/female NPT and Male/Female ISO/BSP. Female Hy-Lok Tube Fittings.

POM Cone Seat
- is standard for easier replacement and PEEK is also available as option.

Internal Seal
- prevent ingress of foreign materials into the actuating threads.

Panel Mount
- is available as option.

Non - Rotating Stem Tip
- ensures positive sealing minimizing seat wear-out.

FKM O - Ring with Back - up Ring
- is Standard.

Orifice in Straight Flow Path
- ensures max Cv.

Features

- **Pressure rating** up to 6000psig @100°F(38°C)
- **Gauge port** available as option
- **SS316 body** as standard
- **Sour gas service** available.
- **100% factory tested**

Materials of Construction

Description	Material / ASTM Specification
Body	SS316 / A479 or A276
Bonnet	
Stem	
Tip	
Seat	POM Standard
Seal	FKM Standard
Handle Set	Stainless Steel
Locking Pin	Stainless Steel

Temperature and Pressure Ratings

Seat Materials	Temperature Rating	Pressure Rating @ 100°F (38°)	Pressure Rating @ Max Temperature
POM (standard)	-20°F ~ 250°F (-29°C ~ 121°C)	6,000 psig (413 bar)	1,000 psig (69bar) @ 250˚F (121˚C)
PEEK (optional)	-20°F ~ 400°F (-29°C ~ 204°C)	6,000 psig (413 bar)	1,000 psig (69bar) @ 400˚F (204˚C)

Spare Seat

- available for maintenance as below

Part No.	Seat Materials	Q`ty / Pack
RPV -*- DS	POM Seat	1 pc
RPV -*- PK	PEEK Seat	1 pc

Note "*" for end connection and size designator
e.g. RPV-MF8N-PK (See Ordering Information)

HY-LOK CORPORATION

© 1998 - 2023 HY-LOK CORPORATION All rights reserved

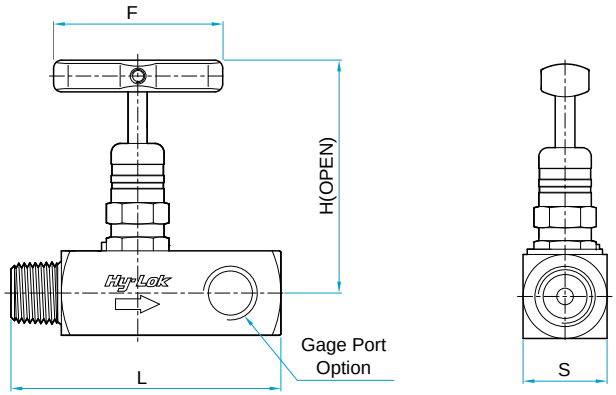

Table of Dimensions

Basic Part No.		Orifice Hole	Cv	End Connections		Dimensions			
				Inlet	Outlet	L	S	F	H
RPV	F -4N	6.3 (0.25)	1.77	1/4" Female NPT		62.0 (2.44)	25.4 (1.00)	60 (2.36)	95.4 (3.75)
	MF-4N			1/4" Male NPT	1/4" Female NPT	74.0 (2.91)			
	F -8N			1/2" Female NPT		84.0 (3.31)	32.0 (1.26)		97.5 (3.34)
	MF-8N			1/2" Male NPT	1/2" Female NPT	90.0 (3.54)			
	MF-12N8N			3/4" Male NPT	1/2" Female NPT				

All dimensions are in millimeters (inches) reference only, subject to change.

Ordering Information

RPV MF G8N 12N 8N PK P S316

Valve Type Designator

Gauge Port Designator *
- Nil : Without (Standard)
- G4N : 1/4" NPT
- G8N : 1/2"NPT

Seat Material Designator *
- Nil : POM (Standard)
- PK : PEEK

Body Material Designator
- S316 : 316 Stainless Steel

End Connection Designator
- F : Both Ends Female Pipe Thread
- MF : Male Pipe Thread & Female Pipe Thread

Size Designator
Inlet / Outlet

Panel Mounting Designator *
- Nil : Without(Standard)
- P : With

- NPT (ISO/BSP)

Thread(in.)	1/4	1/2	3/4
Designator	4N(R)	8N(R)	12N(R)

Note * : No designator is required for standard
e.g. RPV - MF - 12N 8N - S316

SAFETY in VALVE SELECTION

Proper installation, materials compatibility, operation and maintenance of the these are the responsibility of the user. The total system design must be taken into consideration to ensure optimal performance and safety.